PENTAIR

Hypro Series 9202, 9203

HYPRO®

Form L-1555
Rev. C

Original Instruction Manual

KEEP FOR FUTURE REFERENCE

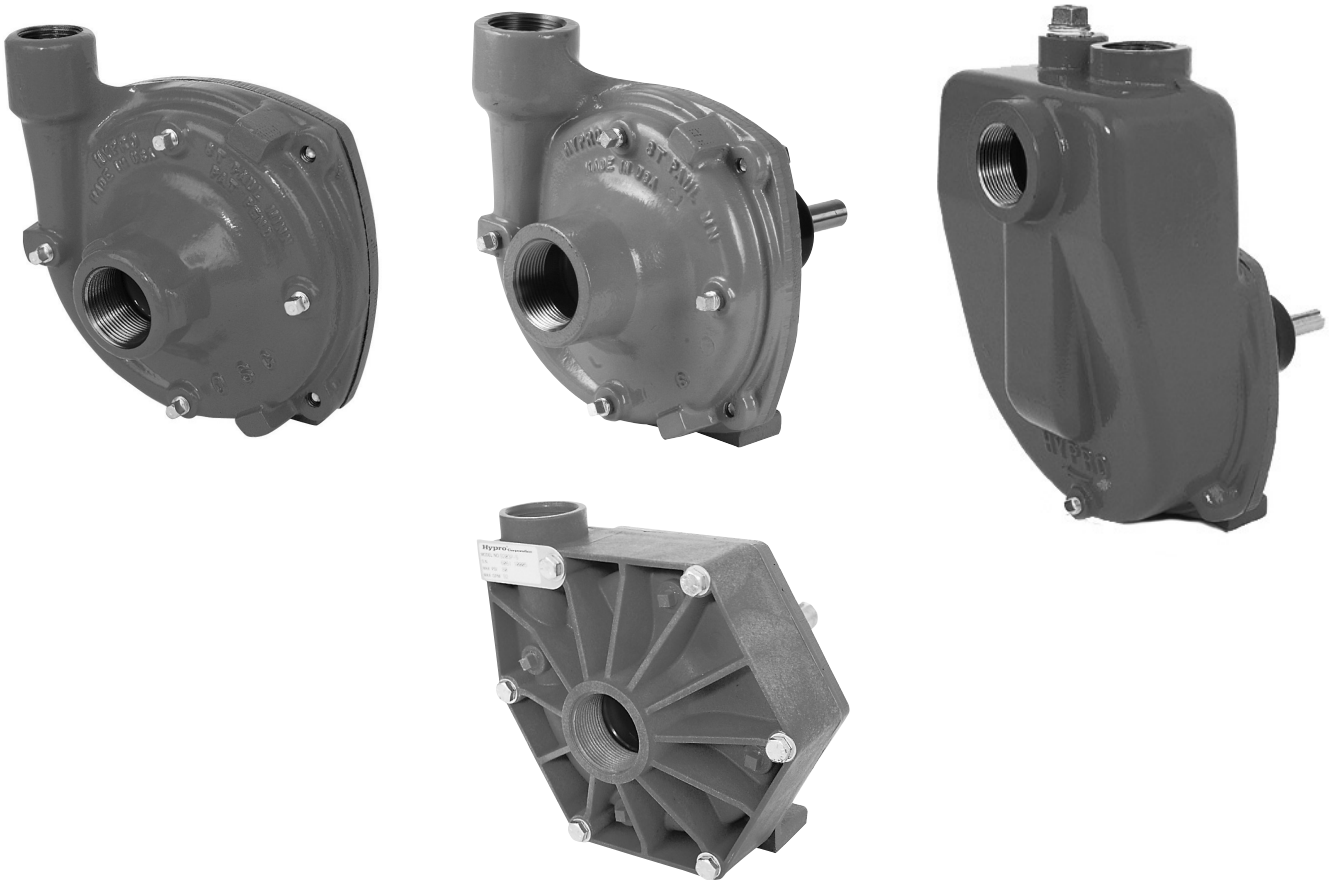

9202C & 9202S; 9203C & 9203S, 9203C-SP & 9203P

Cast Iron, Stainless Steel & Poly Series Centrifugal Pumps

Pentair

375 5th Ave., New Brighton, MN 55112

Phone: (651)766-6300 -OR- 800-424-9776 Fax: 800-323-6496

www.hypropumps.com

EU Authorized Representative: EC REP QNET BV Hommerterweg 286
6436 AM Amstenrade, The Netherlands
KvK Zuid-Limburg 14091511

Contents

EU Language 3

Introduction 4

- Description 4
- Intended Uses 4
- Purpose of Manual 4
- Misuses 4
- Pump Identification 5
- Pump Technical Data 5
- Fluid Pumping Application 10
- Tools 10
- Lifting, Transport, and Intermediate Storage 10

Assembly and Installation 11

- Assembly 11
- Installation 11
- Plumbing Diagram 12

Commissioning, Start-Up, Operation, Shutdown 14

- Information 14
- Start-Up, Operation, Shutdown 14

Maintenance and Servicing 15

- Information 15
- Disposal 15
- Cleaning 15
- Maintenance, Routine Servicing, and Inspection 15
- Troubleshooting 15
- Replacement Parts 16

Declaration of Incorporation 18

Warranty ..... Last Page

EU Languages

DO NOT attempt to install or operate your pump before reading the manual. Original copies of the manual for Hypro pumps are provided in English. To find a copy in your native language, go to www.hypropumps.com.

Vor dem Ablesen des Handbuches versuchen Sie NICHT, Ihre Pumpe zu installieren. Originale des Handbuches fur Hypro-Pumpen werden auf englisch zur Verfugung gestellt. Zu eine Kopie in Ihrer Muttersprache finden, zu www.hypropumps.com zu gehen (German)

N'essayez pas d'installer votre pompe avant de lire le manuel. Des exemplaires originaux du manuel pour des pompes de Hypro sont fournis en anglais. Pour trouver une copie dans votre langue maternelle pour aller a www.hypropumps.com (French)

NON tentare di installare la vostra pompa prima di leggere il manuale. Esemplare originale del manuale per Hypro pompe sono in inglese. Per trovare una copia nella vostra lingua andare a www.hypropumps.com (Italian)

Не пытайтесь установить ваш насос до чтения руководства. Оригинальные копии этого руководства для насосы Hypro на английском языке. Найти копию на ваш родной язык перейти к www.hypropumps.com (Russian)

NO intente instalar su bomba antes de leer el manual. Copias originales del manual para Hypro se provee de bombas en ingles. Para encontrar una copia en tu idioma nativo ir a www.hypropumps.com (Spanish)

NIE probować instalować pompy przed jej odczytaniem instrukcji. Oryginalne kopie instrukcji obsługi pomp Hypro są dostarczane w języku angielskim. Aby uzyskać kopię w twoim ojczystym języku przejdź do www.hypropumps.com (Polish)

Takmaya calışmayın okumadan once pompanın manuel. Orijinal kopyalarını Hypro pompaları icin Ingilizce olarak sunulmuştur. Bir kopyasını bulmak icin yerel dil git www.hypropumps.com (Turkish)

Nao tente instalar a bomba antes de ler o manual. As copias originais dos manuais para Hypro bombas sao fornecidos em Ingles. Para encontrar uma copia em sua lingua nativa ir para www.hypropumps.com (Portuguese)

VERGEET NIET uw pomp voor het lezen van het handboek. Exemplaren van de handleiding voor Hypro pompen zijn beschikbaar in het Engels. Op zoek naar een exemplaar in uw eigen taal ga naar www.hypropumps.com (Dutch)

Introduction

Description

Hypro centrifugal pumps are designed for creating and boosting pressure in fluid circuits. The pump operates by taking in fluid from the inlet port after which it is slung by the impeller and expelled through the outlet port. Construction features include housings, impellers and seals which come in a variety of materials in order to be resistant to a range of chemicals. Standard models of centrifugal pumps rotate clockwise, when looking at the front of the pump.

Intended Uses

Hypro centrifugal pumps are intended for creating or boosting dynamic pressure in approved fluids. Hypro centrifugal pumps should never be used to pump liquids above 140°F (60°C), or below 34°F (1°C). Any uses outside of those specified in this manual are considered misuses and are prohibited. Contact Hypro technical service with any questions regarding specific acceptable uses.

Purpose of Manual

This manual provides instructions and requirements that must be met when installing, using and maintaining the product(s) identified on the cover.

If the product is sold, the seller must pass this manual onto the new owner.

The following special attention notices are used to notify and advise the user of this product of procedures that may be dangerous to the user or result in damage to the product.

ATTENTION

Attention is used to notify of installation, operation, or maintenance information that is important but not safety related.

This symbol is used to denote the presence of an electrical hazard that will result in personal injury, death or property damage.

This symbol is used to denote the presence of a hazard that will result in personal injury, death or property damage.

California Proposition 65 Warning -- This product and related accessories contain chemicals known to the State of California to cause cancer, birth defects or other reproductive harm.

Misuses

Hypro centrifugal pumps are designed to operate effectively within the specified speed, pressure and environmental ranges. Going outside of these ranges will void the warranty and could cause damage to property or serious injury or death.

- **DO NOT** run the pump faster than the maximum specified speed.
- **DO NOT** run the pump higher than the maximum specified pressure.
- **DO NOT** run pumps when the liquid has exceeded the maximum or minimum temperature limit (see Intended Uses).
- **DO NOT** pump non-approved liquids.
- **DO NOT** pump water or other liquids for human consumption.
- **DO NOT** operate any pump under the influence of drugs or alcohol.
- **DO NOT** run the pump dry.

Pump Identification

Hypro uses serialized labeling to enable users to precisely identify the pump's manufacturing date.
Serial Number:
First and second digits: year (14 = 2014)
Third through fifth digits: consecutive day of the year the pump was manufactured.
Sixth through tenth digits: unique pump serial number.

Pump Technical Data

(All specifications and performance data are based on water as a carrier fluid)

9202C

Pump Dimensions			
	Dim.	**Inch**	**mm**
All Models	A	8.25	209.6
	B	7.59	192.8
	C	4.00	101.6
	D	3.69	93.7
	E	3.06	77.7
9202C	F	9.01	228.9
9202S	F	8.96	227.6
All Models	G	4.38	111.3
	H	1.50	38.1
	I	3.00	76.2

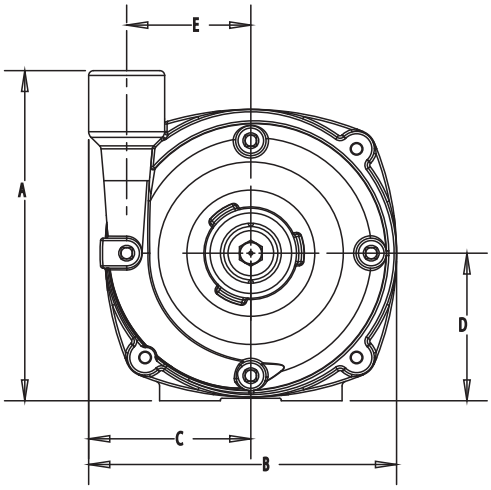

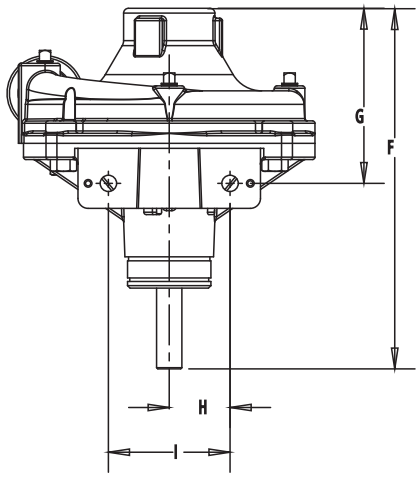

Pump	PTO or Shaft Output	Max Flow Rate (GPM) [LPM]	Max Pressure (PSI) [BAR]	Max RPM	Ports	Dry Weight	Mounting Bolts
9202C	5/8" Solid Shaft	103 [389.9]	170 [11.7]	6000	1-1/4" NPT Inlet 1" NPT Outlet	18lbs [8.2kg]	3/8" OR M10
9202S	5/8" Solid Stainless Shaft						

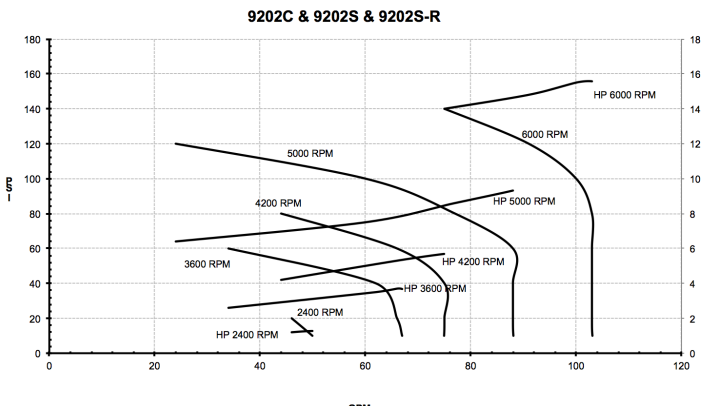

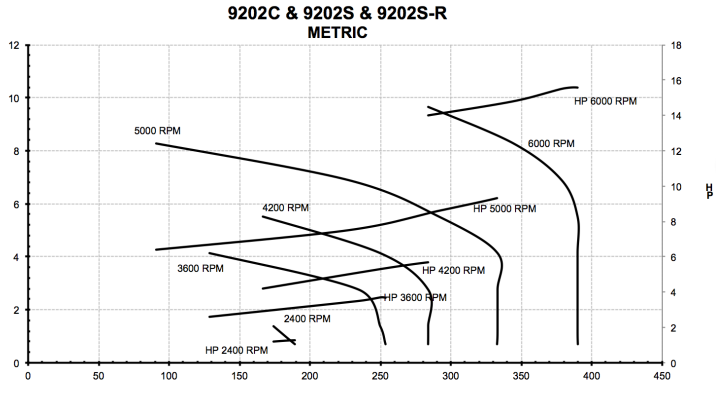

9203S

Pump Dimensions		
Dim.	**Inch**	**mm**
A	8.25	209.6
B	7.59	192.8
C	4.00	101.6
D	3.69	93.7
E	3.06	77.7
F	9.01	228.9
G	4.38	111.3
H	1.50	38.1
I	3.00	76.2

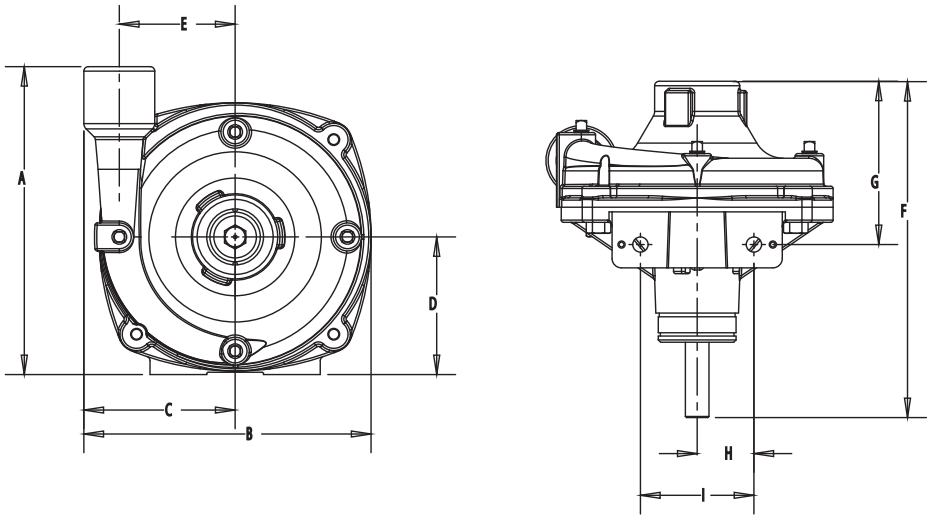

9203C-U 9203S-U

Pump Dimensions		
Dim.	**Inch**	**mm**
A	8.31	211.1
B	8.19	208.0
C	4.60	116.8
D	3.70	94.0
E	3.06	77.7
F	9.80	248.9
G	5.16	131.1
H	1.50	38.1
I	3.00	76.2

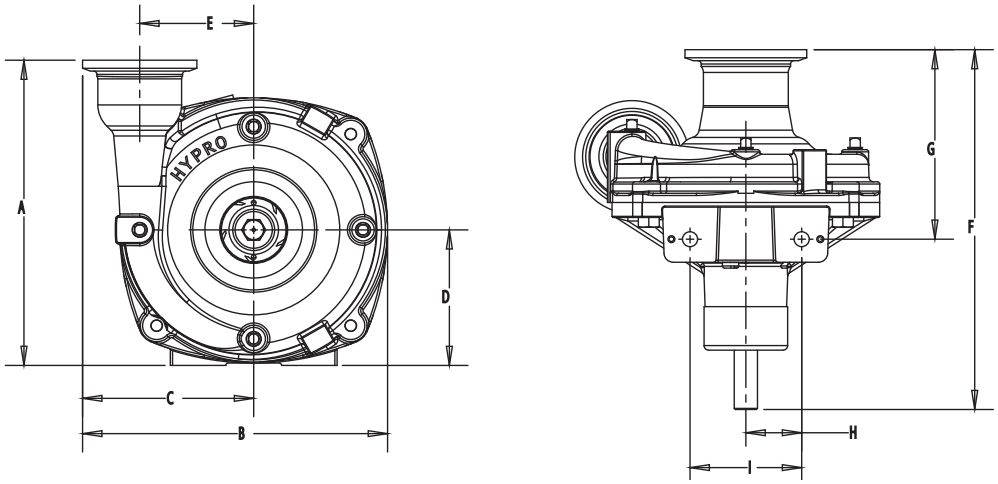

9203C-R 9203S-R

Pump Dimensions		
Dim.	**Inch**	**mm**
A	8.31	211.1
B	7.66	194.6
C	4.06	103.1
D	3.69	93.7
E	3.13	79.5
F	8.96	227.6
G	4.32	109.7
H	1.50	38.1
I	3.00	76.2

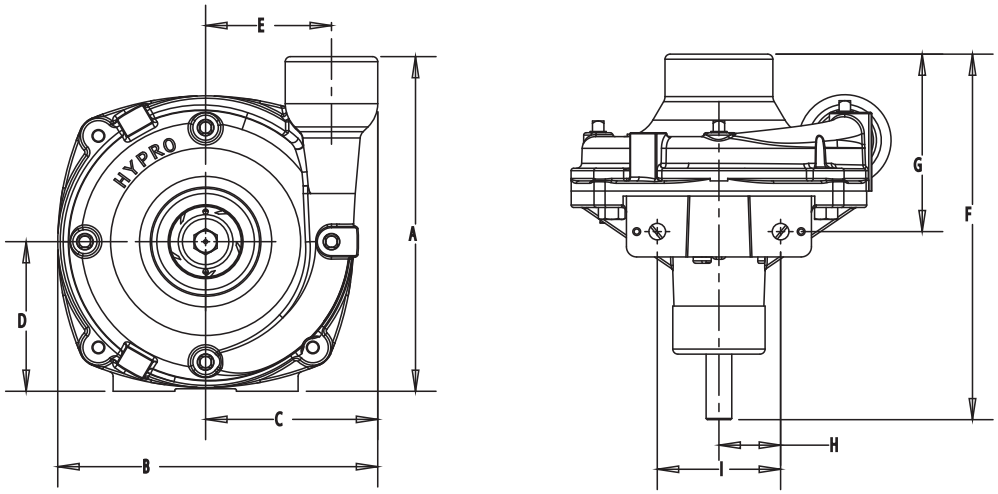

Pump	PTO or Shaft Output	Max Flow Rate (GPM) [LPM]	Max Pressure (PSI) [BAR]	Max RPM	Ports	Dry Weight	Mounting Bolts
9203C	5/8” Solid Shaft	140 [530]	170 [11.7]	6000	1-1/2” NPT Inlet 1-1/4” NPT Outlet	19lbs [8.6kg]	3/8” OR M10
9203C-R							
9203S	5/8” Solid Stainless Shaft						
9203S-U							
9203S-R							

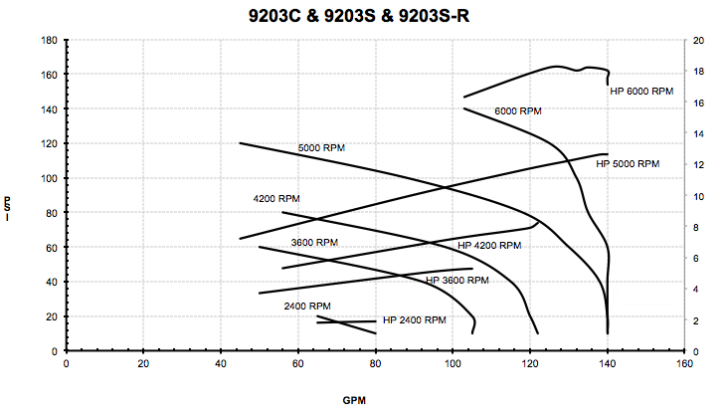

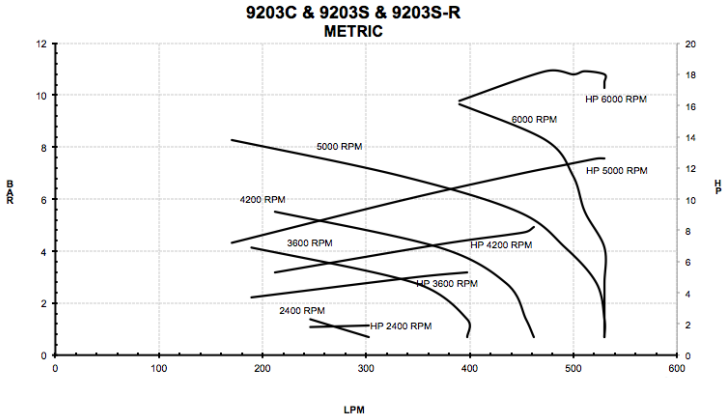

Pump Dimensions		
Dim.	**Inch**	**mm**
A	11.56	293.6
B	8.12	206.2
C	4.54	115.3
D	9.19	233.4
E	0.88	22.4
F	10.36	263.1
G	5.72	145.3
H	1.50	38.1
I	3.00	76.2

9203C-SP 9203S-SP

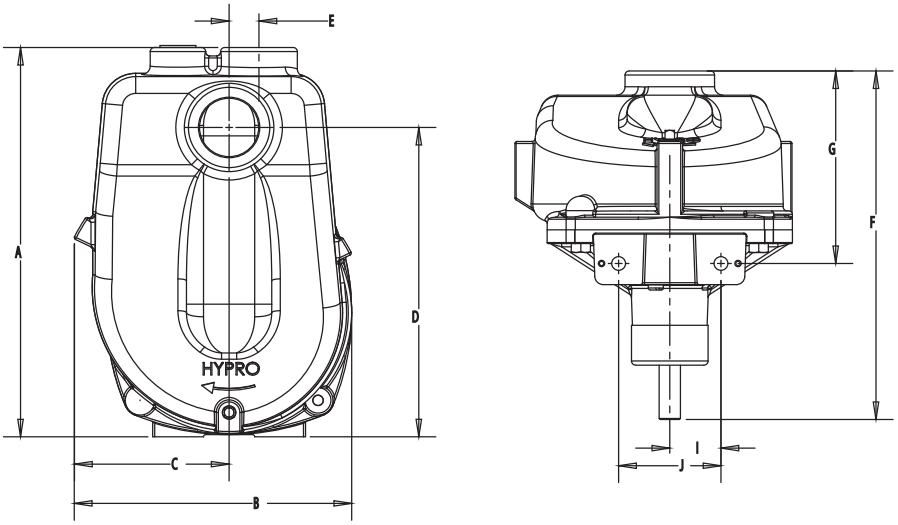

Pump Dimensions		
Dim.	**Inch**	**mm**
A	11.56	293.6
B	8.12	206.2
C	4.54	115.3
D	9.19	233.4
E	0.88	22.4
F	10.36	263.1
G	5.72	145.3
H	1.50	38.1
I	3.00	76.2

9203C-R-SP 9203S-R-SP

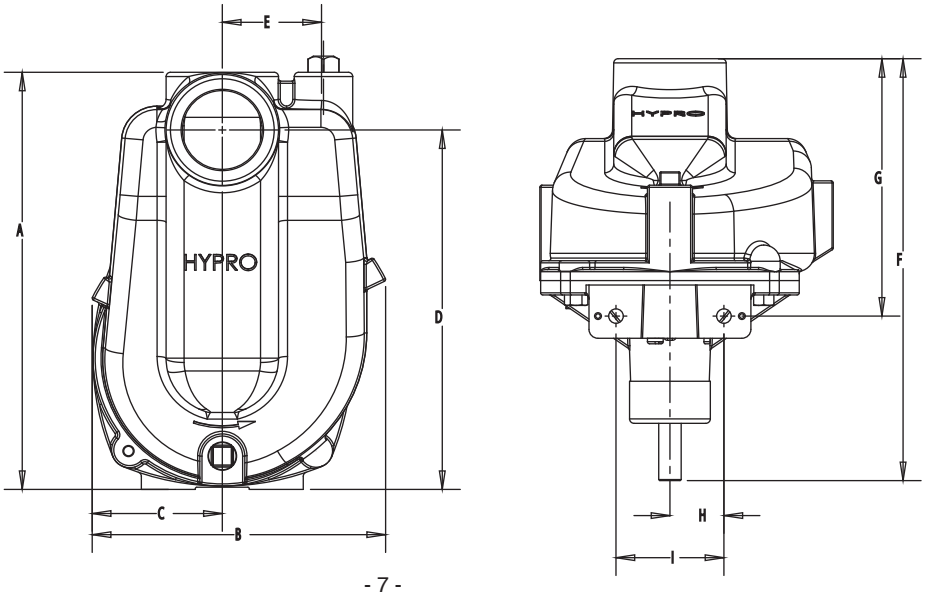

Pump	PTO or Shaft Output	Max Flow Rate (GPM) [LPM]	Max Pressure Rate (PSI) [BAR]	Max RPM	Ports	Dry Weight	Mounting Bolts
9203S-SP	5/8” Solid Stainless Shaft	120 [454.2]	157 [10.8]	6000	1-1/2” NPT Inlet 1-1/4” NPT Outlet	38lbs [17.3kg]	3/8” OR M10
9203C-SP	5/8” Solid Shaft						
9203C-R-SP		140 [530]	155 [10.7]		2” NPT x 2” NPT		

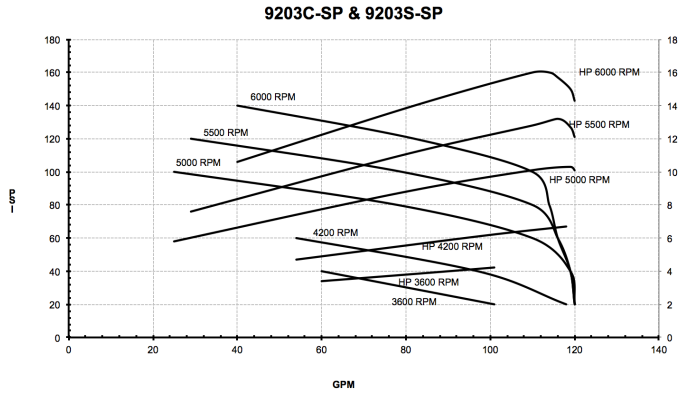

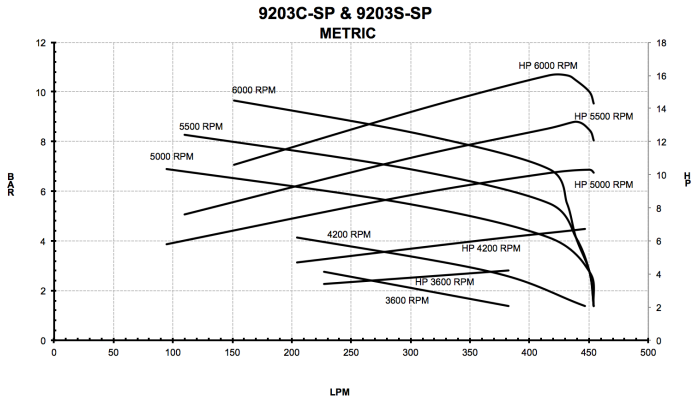

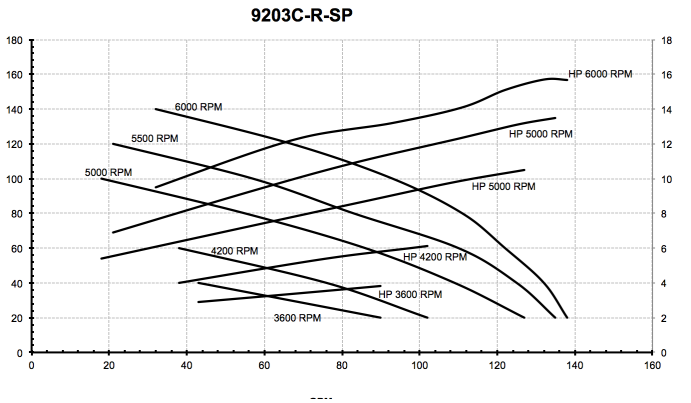

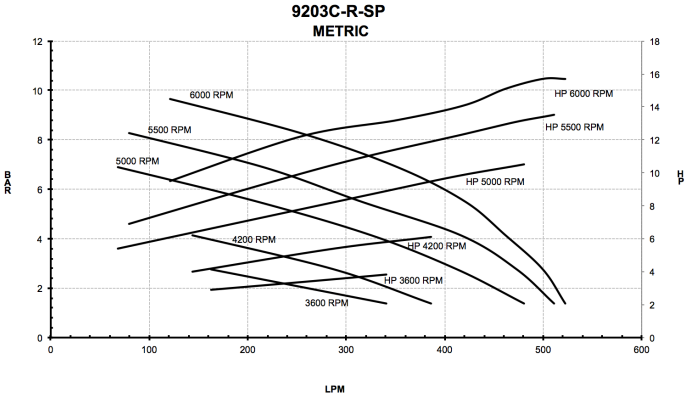

Pump Technical Data

(All specifications and performance data are based on water as a carrier fluid)

9203P-S

Pump Dimensions		
Dim.	**Inch**	**mm**
A	8.31	211.1
B	8.38	212.9
C	4.19	106.4
D	4.00	101.6
E	3.06	77.7
F	9.45	240.0
F	4.75	120.7
G	1.50	38.1
H	3.00	76.2
I	3.00	76.2

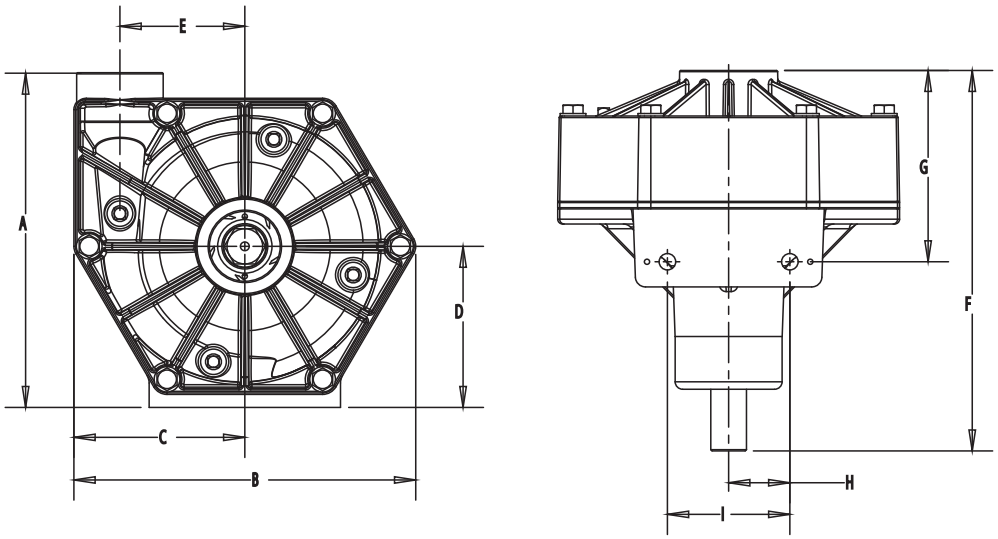

Pump	PTO or Shaft Output	Max Flow Rate (GPM) [LPM]	Max Pressure (PSI) [BAR]	Max RPM	Ports	Dry Weight	Mounting Bolts
9203P-S 9203P-SR & 9203P-SR-B	7/8” Solid Shaft	100 [378.5]	82 [5.7]	4200	1-1/2” NPT Inlet 1-1/4” NPT Outlet	14lbs [6.4kg]	3/8" OR M10
9213P	Shaft Driver 3/4” Hollow Keyed Stainless Steel Shafts	91 [344.5]	65 [4.5]	3600	1-1/2” NPT Inlet 1-1/4” NPT Outlet	19 lbs [8.6kg]	3/8" OR M10

9203P-S & 9203P-SR

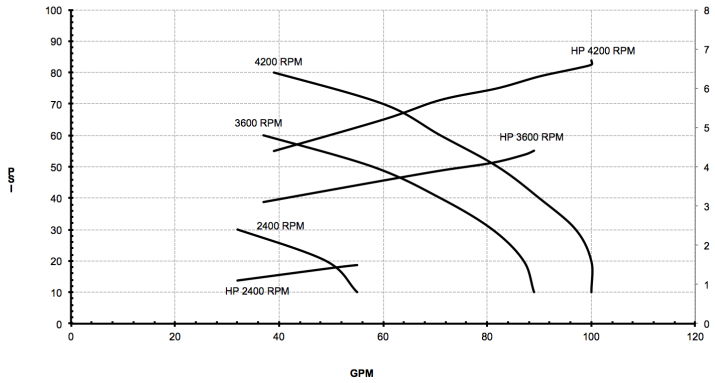

9203P-S & 9203P-SR
METRIC

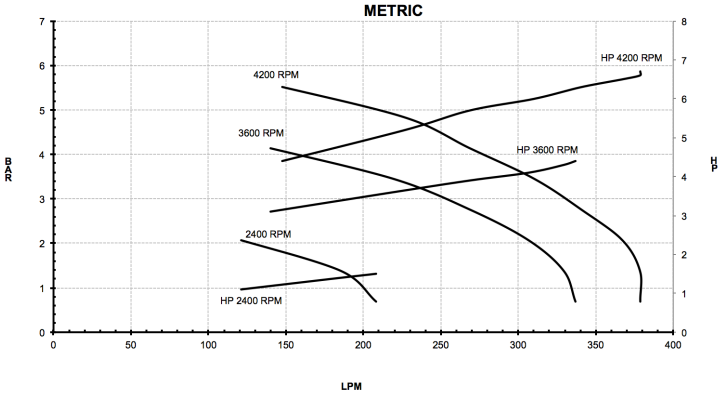

9213P

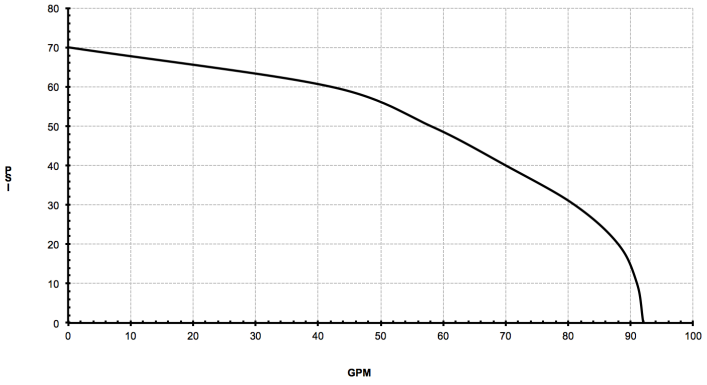

9213P
METRIC

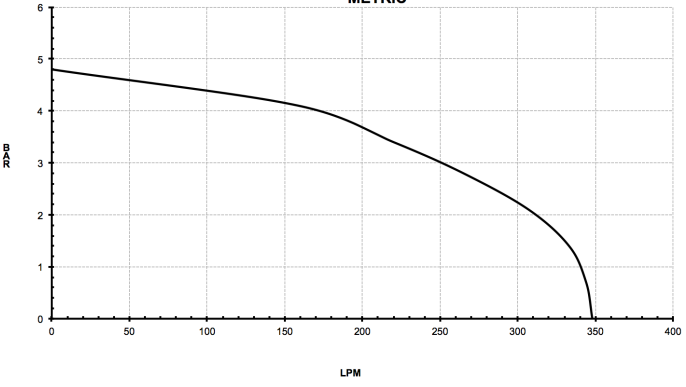

Fluid Pumping Applications

Application	Pump Materials Compatibility							
	Impeller			Pump Housing			Seal	
	Nylon	Polypropylene	GTX (Only 9203)	Stainless	Cast Iron	Polypropylene	Ceramic	Silicon Carbide
Weed Control Chemicals	X	X	X	X	X	X	X	X
Insect Control	X	X	X	X	X	X	X	X
Brush Control	X	X	X	X	X	X	X	X
Pest Control Chemicals and Fumigants	X	X	X	X	X	X	X	X
Liquid Fertilizers	X	X	X	X		X	X	X
Powdered Fertilizers	X	X	X	X	X	X	X	X
Fluid Transfer	X	X	X	X	X	X	X	X
Acids		X		X		X		X

Table 1

Flammable liquids, sewage, and potable water should never be put through any Hypro pump.

Tools

The Hypro centrifugal pumps and mounting assemblies are designed with Imperial (inch) bolts, however, there are many metric (mm) sizes which will work with these mounts. In most cases an adjustable spanner wrench can also be used.

Lifting, Transport, and Intermediate Storage

Packaging Descriptions and Unpacking Instructions

- Hypro centrifugal pumps are shipped in cardboard boxes for safe transporting.
- When pumps are shipped in large quantities they may be put on a pallet to allow for easy storage, lifting and handling.
- Before lifting any pump or pallet determine the weight of the item by looking at the attached packing slips to establish what lifting equipment should be used.
- Before installing the pump determine if all the components are present and undamaged. If the pump is missing components contact customer service immediately.
- Once the pump is unpacked dispose of the packaging in a manner compliant with local and national regulations.

Lifting Instructions

- Before attempting to lift a Hypro pump ensure that the surrounding working area is free of hazards which could cause injury or damage to property.
- During lifting operations any personnel not involved in the lift should not enter the working area.
- If lifting hooks, rope or chains are being used for a lift they must be free of damage and be rated to carry 150% of the weight of the load to be lifted.
- ⚠ Always wear steel toed shoes and cut resistant gloves when attempting to lift.
- When lifting and carrying always keep the pump close to your body. (See Figure 1)
- When starting the lift bend your knees and keep your back straight. (See Figure 1) Tightening the stomach muscles will help keep your back straight.
- During the lift use your legs to do the work never use you back and make sure your legs are at least shoulder width apart. (See Figure 1)

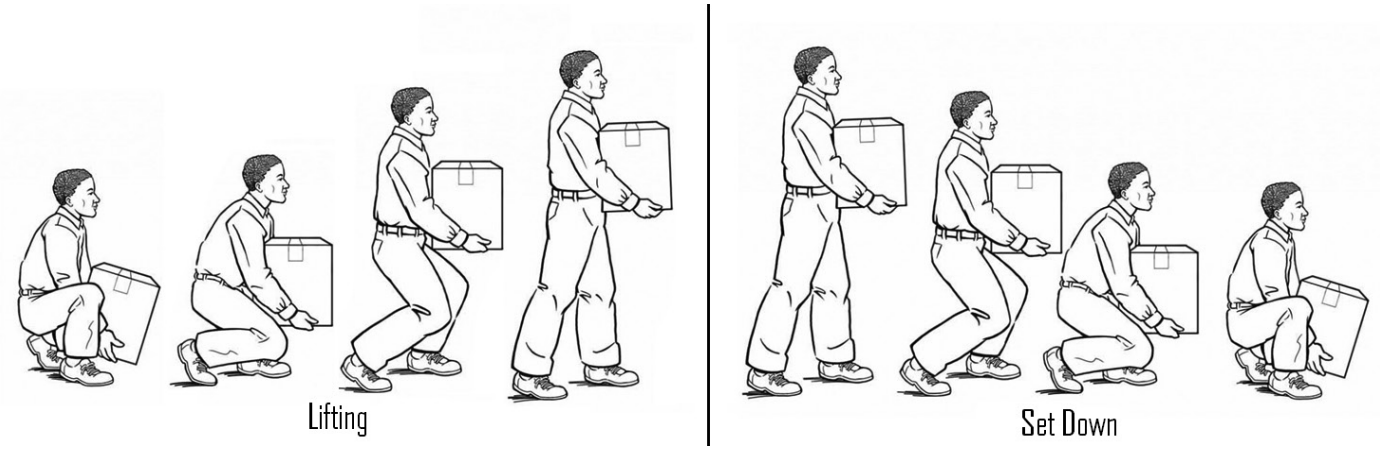

Figure 1

Transport

- All Hypro pumps are capable of being transported by air, sea, rail or motor vehicle. When the pump is shipped ensure that the pump is moved in accordance with local and national laws, and is properly secured to prevent unwanted movement which could cause damage to person or property. Prior to shipping all fluids should be removed from the pump.

Storage

- New pumps in their boxes can be stored several years as long as the port plugs are not removed. Once the plugs have been removed if the pump is not to be used for an extended period of time (i.e. more than 30 days) the pump must be winterized as described in the Cleaning section of this manual.

Assembly and Installation

Assembly

- This pump comes completely assembled

Installation

Before attempting to install your Hypro centrifugal pump it is imperative to read and understand the following:

- ⚠ Installation of a Hypro pump should only be performed by a technician having the knowledge and skills necessary to install the pump without the risk of property damage or injury.
- ⚠ When handling hypro pumps one should wear steel toed shoes and protective gloves in order to protect the feet in the event the pump is dropped and protect the hands from any sharp surfaces on the pump or chemicals.
- ⚠ Pumping systems must be installed in accordance with Hypro installation instructions. Failure to do so will void your warranty and could cause damage to property, serious personal injury, or death
- ⚠ Electrical power cables and pump hoses must be routed where there is no risk of personnel tripping, walking into, or falling because they have been routed in areas where personnel are expected to move. Electrical power cables and pump hoses should be routed according to local and national standards.
- ⚠ It is the installer's responsibility to ensure that AC electric-drive motors, Hypro pumps, and metalwork of support structures are bonded to earth (ground), per local and national standards.
- ⚠ It is the installer's responsibility to conduct earth continuity tests between AC electric-drive motors, Hypro pumps, and metalwork of support structures and earth according to EN60204-1:2006/A1:2009, or its superseding standard, to confirm that all components that need to be connected to earth are satisfactorily bonded.
- ⚠ It is the installer's responsibility to conduct electrical tests in accordance with EN60204-1:2006/A1:2009, or its superseding standard, on finished pump assemblies.
- All connections to electrical components must be number, symbol, or color coded generally as recommended by EN60204-1:2006/A1:2009, or its superseding standard. .

- ⚠ For pumps with gas engines, the exhaust must be directed away from operators and anyone standing nearby to ensure that exhaust fumes do not enter their breathing zone.
- If a rigid plumbing system is to be used on a Hypro centrifugal pump the system must be properly aligned with the inlet and outlet ports.
- ⚠ When installing, adjusting or removing a Hypro centrifugal pump ensure that there are no objects which can fall on the installer and make certain that all machinery to which the pump is to be attached is turned off.
- ⚠ Pumps must be installed in a location where they are accessible for any necessary maintenance.
- ⚠ When a main electrical supply is needed to power electric drive motors installers are responsible for ensuring that a supply disconnect device capable of isolating the machine from its electricity supply should be provided.

Standard Mounting

- In order to prevent injury or damage to property all Hypro pumps should be properly mounted to a solid base where there is no danger of the pump falling or breaking loose. All Hypro pumps come with mounting holes which allow bolts to be put into the pump so it can be secured to a sturdy base. When mounting your Hypro centrifugal pump be sure to use bolts and nuts which are compatible with any chemicals that may come into contact with them as well as choosing the correct grade of bolt based on the pump weight and any expected loads. Pumps should be mounted as close to the liquid source as possible. Non self-priming pumps must be mounted below the liquid level to function properly.

Pump Plumbing

- To achieve maximum pump performance, the outlet port on the pump should be pointing straight up, and pump inlet and outlet lines should be at least the same size as their respective port. Pump plumbing must be capable of withstanding the maximum suction, and pressure, generated by the pump and should have as few restrictions as possible.
- For best priming results, the upper most vent plug can be removed and a vent line can be installed. This line prevents air lock and allows the pump to prime itself by bleeding off trapped air.

Ref. NO.	Description
1	Tank Lid
2	Vent Line
3	Jet Agitator
4	Shut-off Ball Valves
5	Centrifugal Pump
6	Spray Control Console
7	Centrifugal Pump Control
8	Manifold Boom Valve
9	Flowmeter
10	Jet Turret Nozzle Body

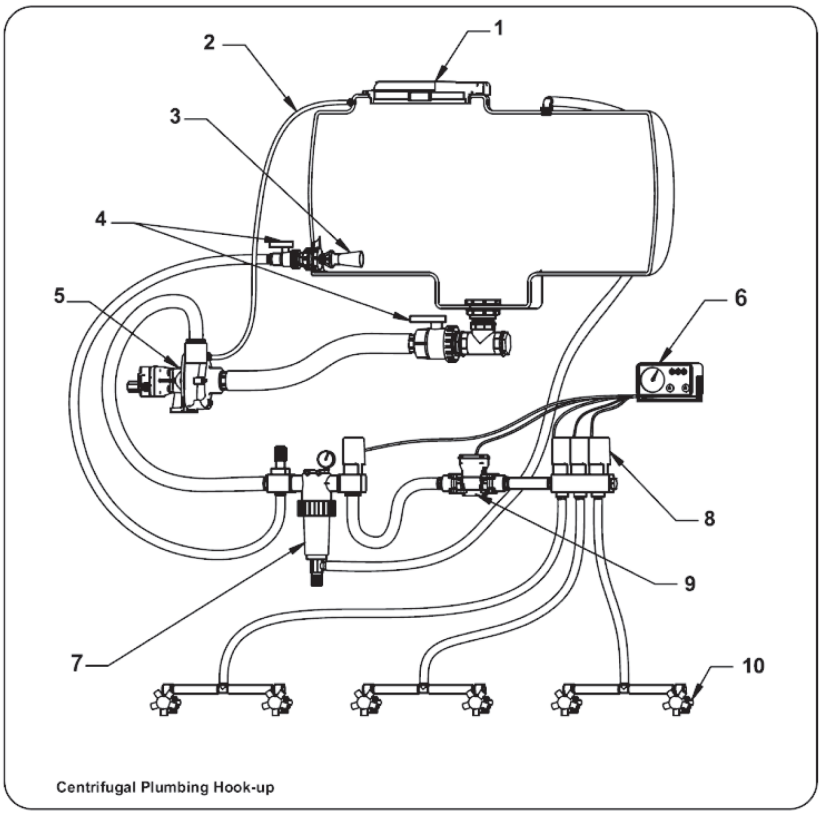

Centrifugal Plumbing Hook-up

- **Pulley Driven** - Mount pulleys as close to pump and motor engine shaft bearings as possible. Check alignment with a straight edge as shown in Fig. 1.

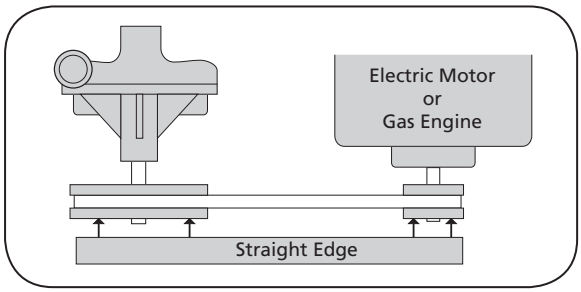

- Make sure that belt has proper tension. (Too much tension will cause bearing wear; too little will cause slippage.) See Fig. 2.

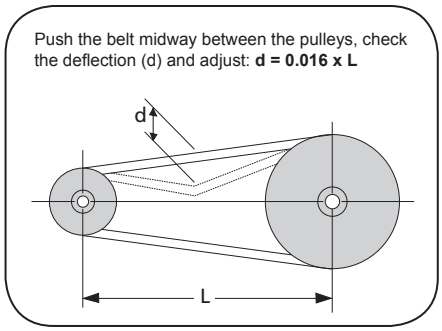

- Check with belt and pulley sources for specific recommendation. To figure proper diameter of pump pulley, multiply motor/engine rpm by diameter of the motor/engine pulley and divide that figure by desired pump speed. Belt and pulley drive systems are typically used to reduce pump speed. For determining proper pulley sizes, use the formula below as a guideline and use "A" or "B" section belts.

$$\frac{\textbf{Motor RPM}}{\textbf{Pump RPM}} = \frac{\textbf{Flow (@ Rated Speed)}}{\textbf{Flow (Desired)}} = \frac{\textbf{Pump Pulley Dia.}}{\textbf{Motor Pulley Dia.}}$$

Example:

- Use a 1725 RPM electric motor to drive a pump at 950 RPM.
- Typically, a pulley diameter on the motor is 3.4 inches. The pump pulley diameter can be determined from the formula above:

$$\frac{\textbf{1725 RPM}}{\textbf{950 RPM}} = \frac{\textbf{Pump Pulley Dia.}}{\textbf{3.4"}}$$

- Solving this equation for the Pump Pulley diameter yields:

$$\frac{\textbf{1725 RPM}}{\textbf{950 RPM}} \textbf{ x 3.4" = 6.2"}$$

- Refer to pump performance charts to determine desired speed and to obtain desired maximum flow.

Attention: Note that shaft rotation is clockwise as viewed from the front. Be sure to drive pump in proper direction.

- **Flexible Coupling** - To install couplings, slide coupling ends onto motor or engine and pump shafts as far as possible. Mount engine/motor and pump on base. Shim up pump or power to align shafts. Leave enough room between shaft ends to install center disc. When aligned, slide ends over disc. Select couplings rated twice required horsepower when using motor; three times when using gas engine.

Attention: Direction of shaft rotation, as viewed from the front of the pump is clockwise for all but 9203C-R, 9203S-R, 9203C-R-SP, 9203S-R-SP.

Control Systems

- All pump systems with electric or hydraulic power sources are required to have a control system which meets all local and national standards.
- Overload and short-circuit protection devices should open at a current that is 10% higher than the normal load current.
- For more detail on a typical system installation, see preceding subsections of the "Assembly and Installation" section of this manual.

Commissioning, Start-Up, Operation, Shutdown

Before attempting to start your pump the following must be understood and followed to ensure safe operation.

Information

- ⚠ When running Hypro centrifugal pumps it is essential that operators use hearing protection as the sound levels can reach levels of 80 decibels.
- ⚠ When handling hypro pumps one should wear steel toed shoes and protective gloves in order to protect the feet in the event the pump is dropped and protect the hands from any sharp surfaces on the pump or chemicals.
- ⚠ Only authorized operators having the knowledge and skill necessary to safely use a Hypro pump, or any equipment the pump is connected to, may run the pump.
- ⚠ When spraying manually it is recommended that chemical resistant facemasks and clothing be worn to prevent any chemicals from coming into contact with the skin or being inhaled.
- ⚠ When spraying manually always spray upwind of yourself as long as the sprayed chemical will not drift into the vicinity of other people.
- ⚠ When installing, adjusting or removing a Hypro centrifugal pump ensure that there are no objects which can fall on the installer and make certain that all machinery to which the pump is to be attached is turned off.
- ⚠ Hypro centrifugal pumps should only be used on tractors or tow behind spray platforms which have electrically conductive tires in order to reduce the risk of electrocution.
- ⚠ Never operate a Hypro centrifugal pump from outside while there is a chance of getting struck by lightning.
- ⚠ Never leave electrical wires or plumbing components where they can be a tripping hazard or become entangled in a moving component. Ideally electrical cables, hoses, pipes and fittings should be routed overhead. In the event electrical wiring must be routed over the ground operators are required to use rubber ramps if they cross a gangway.
- ⚠ If users of a Hypro centrifugal pump are using a PTO shaft, flexible coupling or belt drive they are required to use CE approved PTO shafts and guards
- ⚠ Hypro centrifugal pumps should not be used if the ambient light is below 200lux.
- ⚠ For centrifugal pumps which use gas engines the user should always ensure the exhaust is properly attached to the engine and is not leaking

⚠ **Only use approved chemicals in your pump, for a complete list of approved chemicals see the "Fluid Pumping Applications" section. Failure to follow this warning will void your warranty and could lead to property damage, serious injury or death.**

Start-up, Operation, Shutdown

Before Starting the Pump

- Ensure all unnecessary personnel are clear of the area
- For initial setup and test of your system, it is recommended to start with clean water instead of chemicals, and confirm the system and plumbing connections are leak free.
- Ensure that there is fluid in the source tank or supply line. Do not run dry.
- Check line strainer for debris or clogs. Remove any found.
- Check all plumbing connections to make sure they are tight.
- Check power source and connections.
- Check all valves and regulators are set to the desired setting and are functioning properly.
- Ensure all hoses are properly positioned and are not damaged in any way.
- Ensure PTO shaft shields are in place and are not loose

Maintenance and Servicing

Information

- ⚠ All maintenance should be done when machinery is stationary and has been isolated from its energy sources. It is dangerous to perform maintenance while machinery is still connected to its power source. Machinery should be isolated from its electrical, hydraulic or gas engine power source.
- ⚠ Be sure to release all pressure from the system before performing any sort of maintenance on a Hypro pump.
- ⚠ DO NOT perform service or maintenance to the pump, or attached components, until the pump unit is below 109°F(43°C)
- ⚠ When handling Hypro pumps one should wear steel toed shoes and protective gloves in order to protect the feet in the event the pump is dropped and protect the hands from any sharp surfaces on the pump or chemicals. If the pump is being repaired while the pump is in service eye protection should also be worn.

Any hazardous liquids should be disposed of in a manner which complies with local and national regulations, never dump fluids onto the ground.

Disposal

When disposing of a Hypro pump be sure to remove all fluids from the pump before scrapping. These fluids should be disposed of in a manner which complies with local and national regulations, never dump fluids onto the ground. Once the pump is free of all fluids it may be scrapped in accordance with local and national laws.

Cleaning

Your pump will last longer and give best performance when properly taken care of. Proper pump care depends on the liquid being pumped and when the pump will be used again. After each use, flush pump with a neutralizing solution for the liquid just pumped. Follow with a clean water rinse. This is especially important for corrosive chemicals. It is good practice to clean the pump after each use to prevent deposits from forming and damaging the pump. For infrequent use and before long periods of storage, drain pump thoroughly. Open any drain plugs, remove suction hose from liquid, and blow pump dry with air. A antifreeze/rust inhibitor should be injected into the pump before both ports are plugged and the pump is stored. Plug all ports to keep out air until pump is used again.

Maintenance, Routine Servicing, and Inspection

PREVENTATIVE MAINTENANCE CHECK-LIST

Check	Daily	Weekly
Water Leaks	X	
Plumbing		X

- Each system's maintenance cycle will be exclusive. If system performance decreases, check immediately.
- Duty cycle, temperature, quality, type of fluid being pumped, and inlet feed conditions all affect the life of spray boom assemblies and service cycle.

Troubleshooting

Before attempting to service your pump be sure that it is disconnected from all energy sources

Symptom	Probable Cause(s)	Corrective Action
Pump does not prime	Leak in suction line	Check hose and fittings for leaks and correct
	Obstruction in suction line	Inspect hose for obstructions and remove
	Suction hose stuck to tank	Cut a notch or "V" in end of suction hose
	Clogged strainer	Check strainer and clean regularly
Low Discharge	Blocked suction hose	Inspect suction hose and repair as necessary
	Pump worn	Repair pump
	Undersized suction line	See Installation
Pump will not turn	Impeller plugged	Inspect and clear obstruction

Replacement Parts

The following drawings show the pumps and their replacement parts. **Only genuine replacement parts should be used, failure to follow this warning can result in damage to property, serious injury or death.** If the pump malfunctions or is defective it should be sent back to Hypro for service.

9202C, 9202S

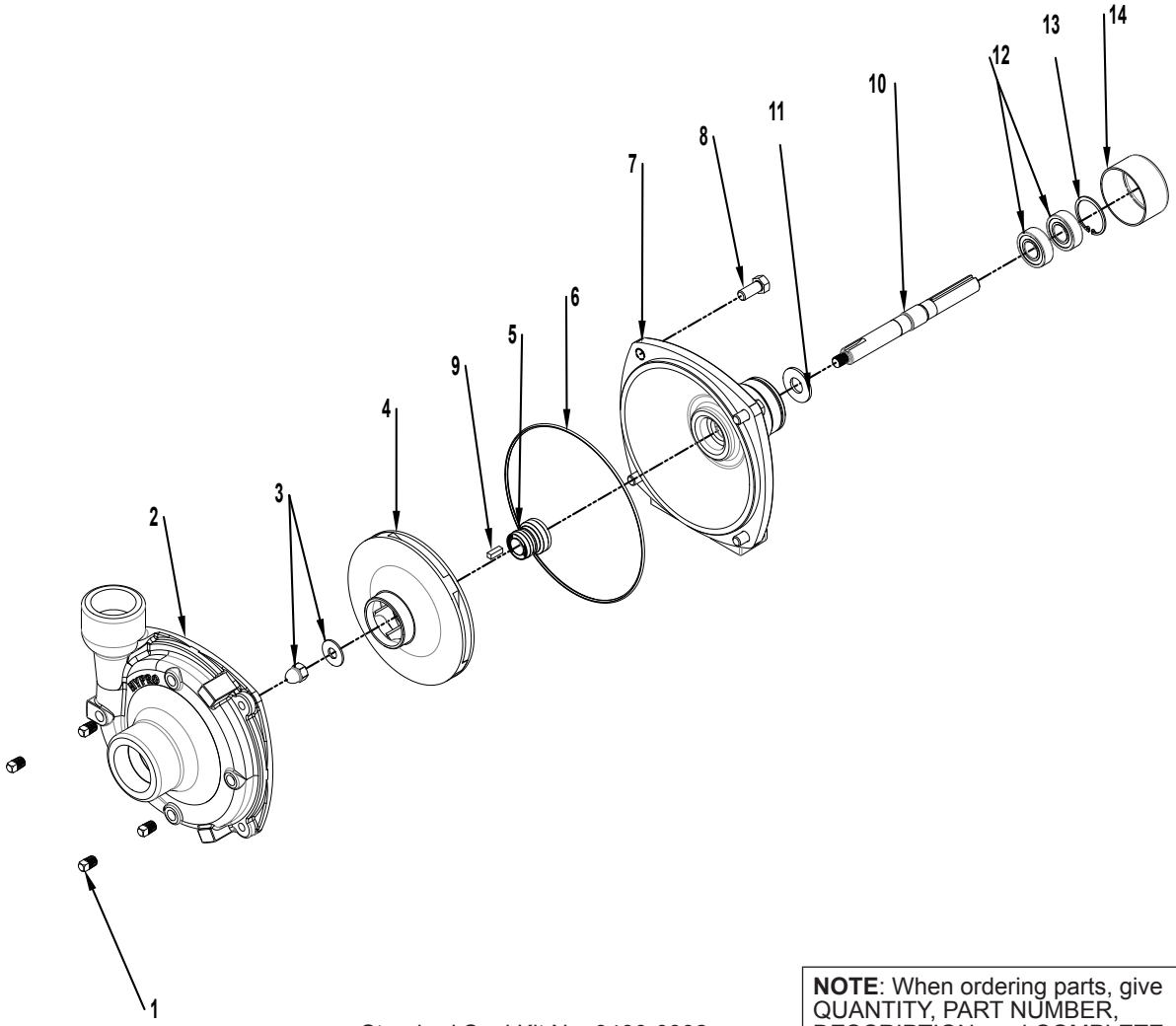

Silicon Carbide Seal Kit No. 3430-0589 consists of:
(1) Ref. 5 Mechanical Seal
(1) Ref. 6 O-Ring

Standard Seal Kit No. 3430-0332 consists of:
(1) Gasket (not shown)
(1) Ref. 5 Mech. Seal (Viton)
(1) Ref. 6 O-Ring

NOTE: When ordering parts, give QUANTITY, PART NUMBER, DESCRIPTION, and COMPLETE MODEL NUMBER. Reference number are used ONLY to identify part in the drawing and are NOT to be used as order numbers.

Ref. No.	Qty. Req'd.	Part No.	Description
1	4	2406-0007	Drain Plug (Cast Series)
1A	4	2406-0016	Drain Plug (Stainless Steel)
2	1	0150-9200C	Pump Casting (Cast Series)
2	1	0156-9200S	Pump Casting (Stainless Series)
3	1	3430-0825	Impeller Nut/Washer (Stainless Series)
3A	1	2253-0002	Impeller Nut/Washer (Cast Series)
4	1	0401-9100P	Impeller (Cast Series)
4	1	0402-9100P	Impeller (Stainless Series)
5	1	3430-0332	Mechanical Seal
5	1	3430-0589	Mechanical Seal (Stainless Steel)
6	1	1720-0083	O-Ring

Ref. No.	Qty. Req'd.	Part No.	Description
7	1	0750-9200C3	Mounting Flange (Cast Series)
7	1	0756-9200S	Mounting Flange (Stainless Series)
8	4	2210-0020	Bolt (Cast Series)
8	4	2210-0125	Bolt (Stainless Series)
9	1	1610-0015	Key (Cast Series)
9	1	1610-0044	Key (Stainless Series)
10	1	3430-0844	Shaft
11	1	1410-0056	Slinger Ring
12	2	2000-0010	Ball Bearing
13	1	1820-0013	Bearing Retainer
14	1	2300-0025	Protective Cover

Replacement Parts

The following drawings show the pumps and their replacement parts. **Only genuine replacement parts should be used, failure to follow this warning can result in damage to property, serious injury or death.** If the pump malfunctions or is defective it should be sent back to Hypro for service.

9203C, 9203S & 9203C-R & 9203S-R, 9203C-SP, 9203C-R-SP & 9203S-SP

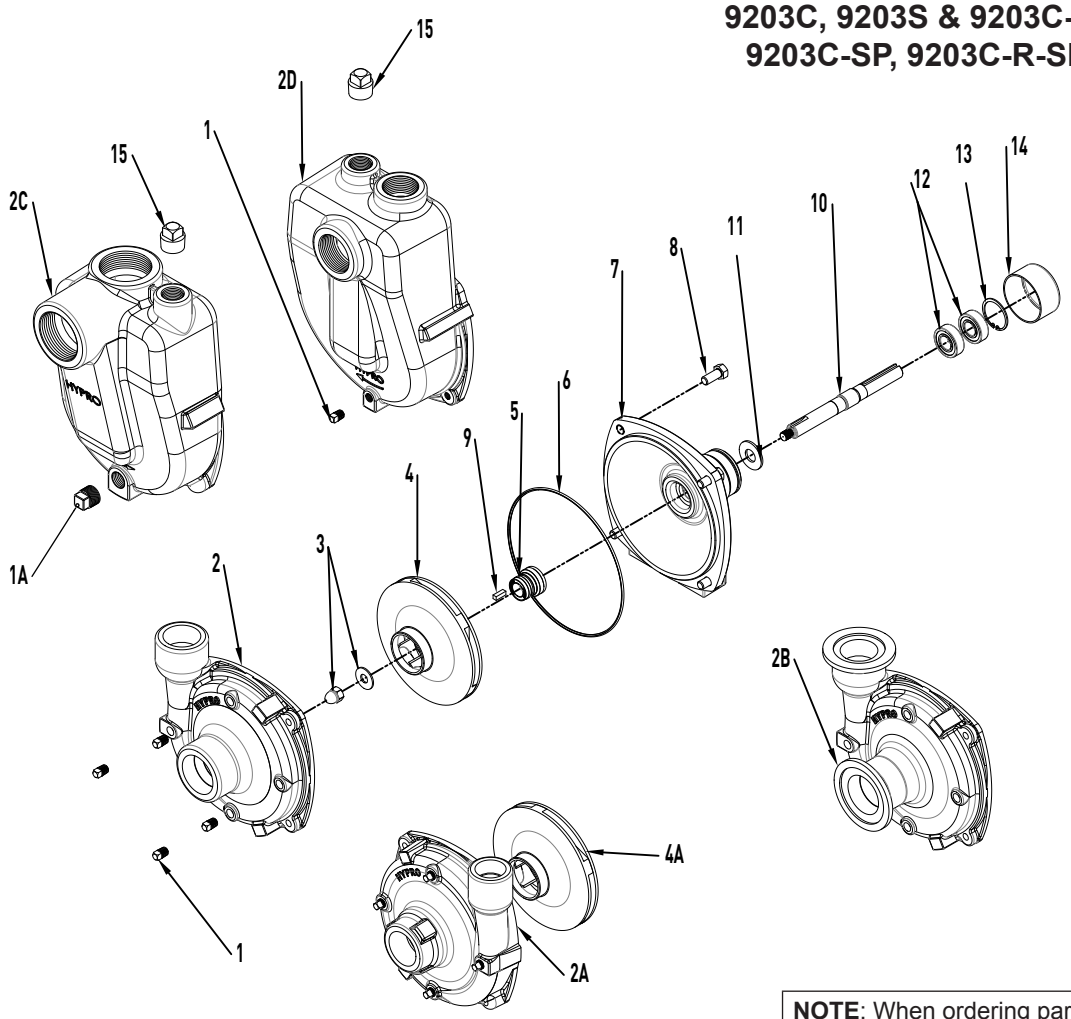

Silicon Carbide Seal Kit No. 3430-0589 consists of:
(1) Ref. 5 Mechanical Seal
(1) Ref. 6 O-Ring

Standard Seal Kit No. 3430-0332 consists of:
(1) Gasket (not shown)
(1) Ref. 5 Mech. Seal (Viton)
(1) Ref. 6 O-Ring

NOTE: When ordering parts, give QUANTITY, PART NUMBER, DESCRIPTION, and COMPLETE MODEL NUMBER. Reference number are used ONLY to identify part in the drawing and are NOT to be used as order numbers.

Ref. No.	Qty. Req'd.	Part No.	Description
1	4	2406-0007	Drain Plug (Cast Series)
1A	4	2406-0016	Drain Plug (Stainless Steel)
1B	1	2406-0002	Drain Plug
2	1	0150-9000C	Pump Casting (Cast Series)
2	1	0150-9000S	Pump Casting (Stainless Series)
2A	1	0152-9000C	Pump Casting (Reverse)(Cast Series)
2A	1	0152-9000S	Pump Casting (Reverse)(Stainless)
2B	1	0153-9000C	Pump Casting (Flanged)(Stainless)
2B	1	0153-9000S	Pump Casting (Flanged)(Stainless)
2C	1	0152-9070C	Self Priming Chamber
2C	1	0150-9070S	Self Priming Chamber (Stainless)
2D	1	0150-9070C	Self Priming Chamber
3	1	3430-0825	Impeller Nut/Washer
3A	1	2253-0002	Impeller Nut/Washer
4	1	0401-9100P	Impeller (Cast Series)
4	1	0402-9100P	Impeller (Stainless Series)
4	1	0407-9303P	Impeller (GTX)

Ref. No.	Qty. Req'd.	Part No.	Description
4A	1	0403-9100P	Impeller (Reverse)(Cast Series)
4A	1	0404-9100P	Impeller (Reverse)(Stainless)
5	1	3430-0332	Mechanical Seal
5	1	3430-0589	Mechanical Seal (Stainless Steel)
6	1	1720-0083	O-Ring
7	1	0750-9200C3	Mounting Flange (Cast Series)
7	1	0756-9200S	Mounting Flange (Stainless Series)
8	4	2210-0020	Bolt (Cast Series)
8	4	2210-0125	Bolt (Stainless Series)
9	1	1610-0015	Key (Cast Series)
9	1	1610-0044	Key (Stainless Series)
10	1	3430-0844	Shaft
11	1	1410-0056	Slinger Ring
12	2	2000-0010	Ball Bearing
13	1	1820-0013	Bearing Retainer
14	1	2300-0025	Protective Cover
15	1	2406-0001	Pipe Plug

Replacement Parts

The following drawings show the pumps and their replacement parts. **Only genuine replacement parts should be used, failure to follow this warning can result in damage to property, serious injury or death.** If the pump malfunctions or is defective it should be sent back to Hypro for service.

9203P-S, 9203P-SR, 9203P-SR-B, 9213P

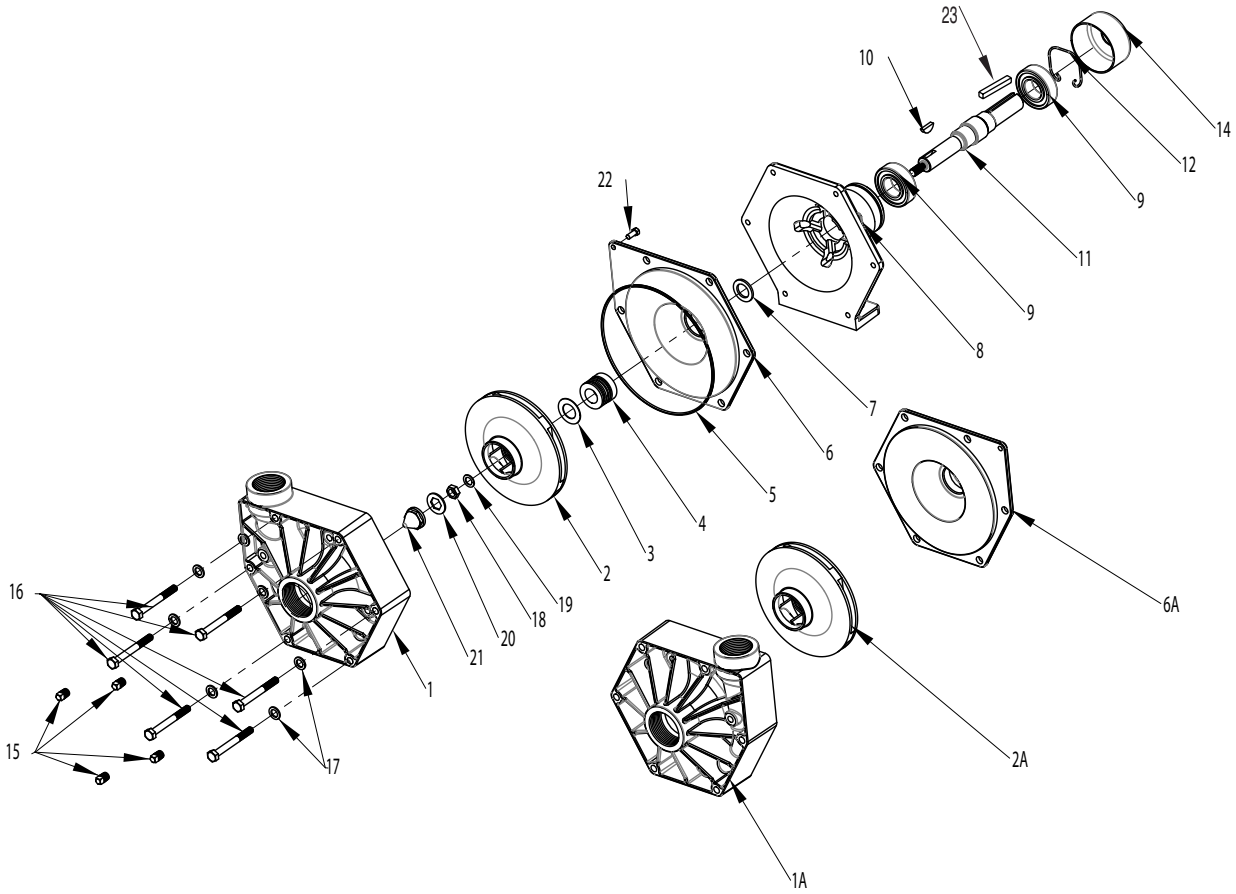

Seal Kit for Stainless Series:
No. 3430-0333 consists of:
(1) Ref. 3 Gasket
(1) Ref. 4 Mechanical Seal
(1) Ref. 5 O-Ring
(1) Ref. 19 Washer
(1) Ref. 20 Gasket

Silicon Carbide Seal Kit
No. 3430-0590 consists of:
(1) Ref. 4 Mechanical Seal
(1) Ref. 5 O-Ring
(1) Ref. 19 Washer
(1) Ref. 20 Gasket

NOTE: When ordering parts, give QUANTITY, PART NUMBER, DESCRIPTION, and COMPLETE MODEL NUMBER. Reference numbers are used ONLY to identify part in the drawing and are NOT to be used as order numbers.

Ref. No.	Qty. Req'd.	Part No.	Description
1	1	0700-9000P	Pump Casting (9203P-S)
1A	1	0701-9500P	Pump (Casting) Reverse
2	1	0403-9000P	Impeller (9203P-S)
2A	1	0402-9000P	Impeller (9203P-S)-R
3	1	1700-0101	Gasket
4	1	3430-0333	Mechanical Seal
4A	1	3430-0590	Mechanical Seal
5	1	1721-0083	O-Ring
6	1	0750-9000P	Back Cover (9203P-S)
6A	1	0700-9500P	Back Cover Reverse
7	1	1410-0083	Slinger Ring
8	1	0702-9200C	Flange
9	2	2008-0001	Bearing

Ref. No.	Qty. Req'd.	Part No.	Description
10	1	04432	Woodruff Key (Stainless Steel)
11	1	3430-0846	Shaft (316 Stainless Steel)
12	1	1820-0025	Retaining ring
13	1	04432-SHW	Key
14	1	2300-0034	Plastic Cap
15	4	2406-0016	Plug
16	6	2210-0087	Hex Head Bolt
17	6	2270-0041	Washer
18	1	2250-0051	Jam Nut
19	1	2270-0057	Washer
20	1	1700-0097	Gasket
21	1	2250-0052	Impeller Nut
22	1	2210-0088	Screw
23	1	1610-0004	KEY

EC Declaration of Incorporation

Manufacturer's Name:	**Pentair Flow Technologies, LLC**
Manufacturer's Address:	375 Fifth Avenue NW, New Brighton, MN 55112, USA

Declare that the partially complete machinery described below conforms to applicable health and safety requirements of Parts 1 of Annex I of Machinery Directive 2006/42/EC. This partly completed machinery must not be put into service until the equipment into which it is to be incorporated has been declared in conformity with the provisions of this directive. Confidential technical documentation has been compiled as described in Annex VII Part B of Machinery Directive 2006/42/EC and is available to European national authorities on written request. If a request is received, documentation will be transmitted either electronically or by post. Clauses 1.1.4, 1.1.7, 1.1.8 Section 1.2, Clauses 1.3.5, 1.3.6, 1.3.7, 1.3.8.1, 1.3.8.2, 1.3.9, 1.4.1, 1.4.2.1, 1.4.2.2, 1.4.2.3, 1.4.3, 1.5.2, 1.5.7, 1.5.12, 1.5.14, 1.5.16, 1.6.2, 1.7.1.1, 1.7.1.2, 1.7.2, and 1.7.4.2 are clauses of Machinery Directive 2006/42/EC that have not been met, but could be applicable and must be addressed during installation by a third party.

Description:	**PENTAIR Pump**
Type:	**Roller Pumps**
Series Numbers:	**1502, 1700, 4001, 4101, 6500, 7560, 7700**
Type:	**Centrifugal Pumps**
Series Numbers:	**1442P, 9000, 9202, 9203, 9205, 9206, 9208, 9262, 9263, 9253, 9302, 9303, 9305, 9306, 9307, 9308**

The following standards have either been referred to or been complied with in part or in full as relevant:

ENISO 12100	Machinery Safety	General principles for design - Risk assessment and risk reduction
EN809-1998 + A1 2009	Machinery Safety	Pumps and pump units for liquids - Common safety requirements
EN ISO 13732-1	Machinery Safety	Ergonomics of the thermal environment
EN ISO 3744:2010	Acoustics	Determination of sound power levels and sound energy levels of noise sources using sound pressure
EN ISO 11202/A1 1997	Machinery Safety	Noise emitted by machinery and equipment
EN 12162:2001+A1:2009	Machinery Safety	Liquid pumps - Safety requirements - Procedure for hydrostatic testing
EN ISO 4254-6:2009	Machinery Safety	Sprayers and liquid fertilizer distributors
97-68-EC + 2010/26/EU	Gas Emission	Non-road gas emissions

Name ……..…… **Position …..…….……**

Signature ……..……. **Date …..……..…….……**

Place of Signing…….....

EC	REP

QNET BV
Hommerterweg 286
6436 AM Amstenrade
The Netherlands

Limited Warranty on Hypro/SHURflo Agricultural Pumps & Accessories

Hypro/SHURflo (hereafter, "Hypro") agricultural products are warranted to be free of defects in material and workmanship under normal use for the time periods listed below, with proof of purchase.

- Pumps: one (1) year from the date of manufacture, or one (1) year of use. This limited warranty will not exceed two (2) years, in any event.
- Accessories: ninety (90) days of use.

This limited warranty will not apply to products that were improperly installed, misapplied, damaged, altered, or incompatible with fluids or components not manufactured by Hypro. All warranty considerations are governed by Hypro's written return policy.

Hypro's obligation under this limited warranty policy is limited to the repair or replacement of the product. All returns will be tested per Hypro's factory criteria. Products found not defective (under the terms of this limited warranty) are subject to charges paid by the returnee for the testing and packaging of "tested good" non-warranty returns.

No credit or labor allowances will be given for products returned as defective. Warranty replacement will be shipped on a freight allowed basis. Hypro reserves the right to choose the method of transportation.

This limited warranty is in lieu of all other warranties, expressed or implied, and no other person is authorized to give any other warranty or assume obligation or liability on Hypro's behalf. Hypro shall not be liable for any labor, damage or other expense, nor shall Hypro be liable for any indirect, incidental or consequential damages of any kind incurred by the reason of the use or sale of any defective product. This limited warranty covers agricultural products distributed within the United States of America. Other world market areas should consult with the actual distributor for any deviation from this document.

Return Procedures

All products must be flushed of any chemical (ref. OSHA section 1910.1200 (d) (e) (f) (g) (h)) and hazardous chemicals must be labeled/tagged before being shipped* to Hypro for service or warranty consideration. Hypro reserves the right to request a Material Safety Data Sheet from the returnee for any pump/product it deems necessary. Hypro reserves the right to "disposition as scrap" products returned which contain unknown fluids. Hypro reserves the right to charge the returnee for any and all costs incurred for chemical testing, and proper disposal of components containing unknown fluids. Hypro requests this in order to protect the environment and personnel from the hazards of handling unknown fluids.

Be prepared to give Hypro full details of the problem, including the model number, date of purchase, and from whom you purchased your product. Hypro may request additional information, and may require a sketch to illustrate the problem.

Contact Hypro Service Department at 800-468-3428 to receive a Return Merchandise Authorization number (RMA#). Returns are to be shipped with the RMA number clearly marked on the outside of the package. Hypro shall not be liable for freight damage incurred during shipping. Please package all returns carefully. All products returned for warranty work should be sent **shipping charges prepaid** to:

HYPRO / PENTAIR
Attention: Service Department
375 Fifth Avenue NW
New Brighton, MN 55112

For technical or application assistance, call the **Hypro Technical/Application number: 800-445-8360**, or send an email to: **technical@hypropumps.com**. To obtain service or warranty assistance, call the **Hypro Service and Warranty number**: **800-468-3428**; or send a fax to the **Hypro Service and Warranty FAX**: **651-766-6618**.

*Carriers, including U.S.P.S., airlines, UPS, ground freight, etc., require specific identification of any hazardous material being shipped. Failure to do so may result in a substantial fine and/or prison term. Check with your shipping company for specific instructions.

Visit www.hypropumps.com/register today to register your product and stay up-to-date on new products and promotional offers.

The following information is required:
Model # _____ Serial # _____

Hypro (12/15)
Printed in USA

PENTAIR

375 Fifth Avenue NW • New Brighton, MN 55112
Phone: (651) 766-6300 • 800-424-9776 • Fax: 800-323-6496
www.hypropumps.com