SUBMERSIBLE SOLIDS HANDLING PUMP

DUPLEX TL(X)33HH

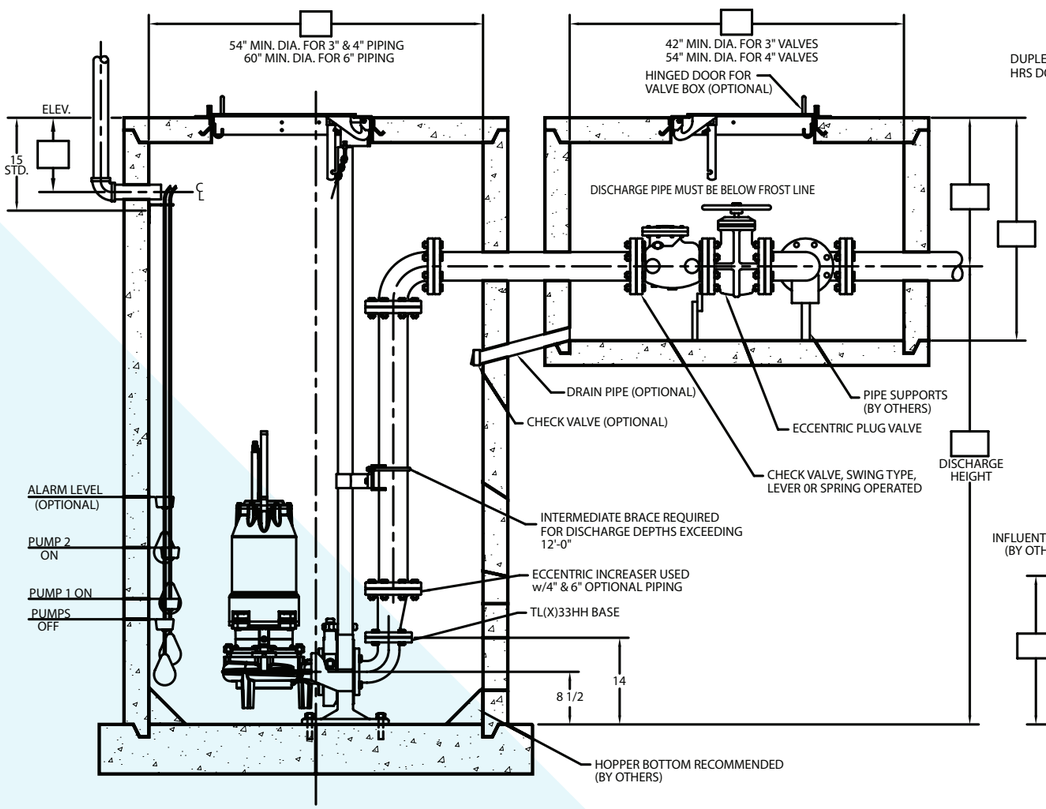

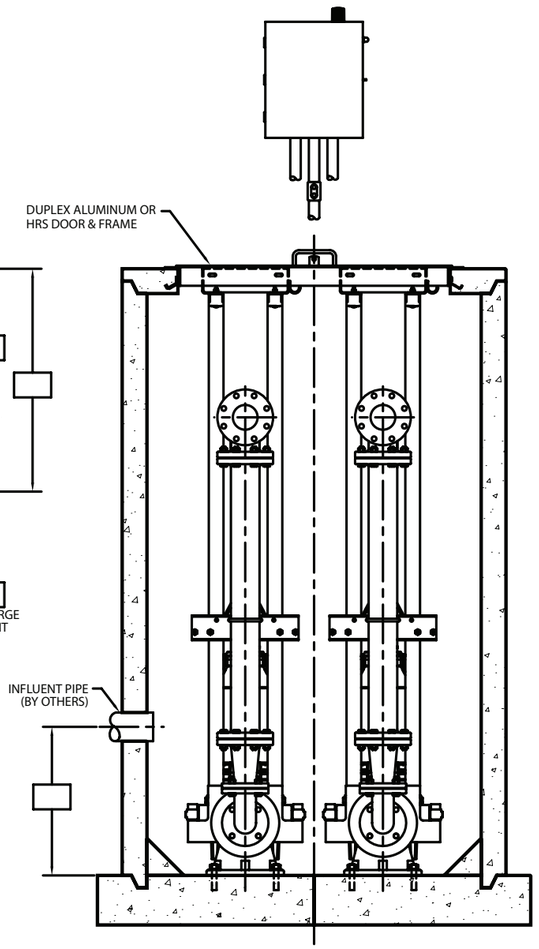

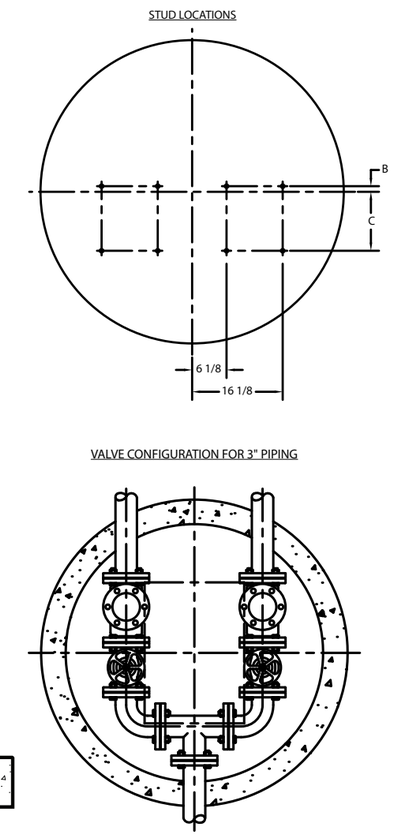

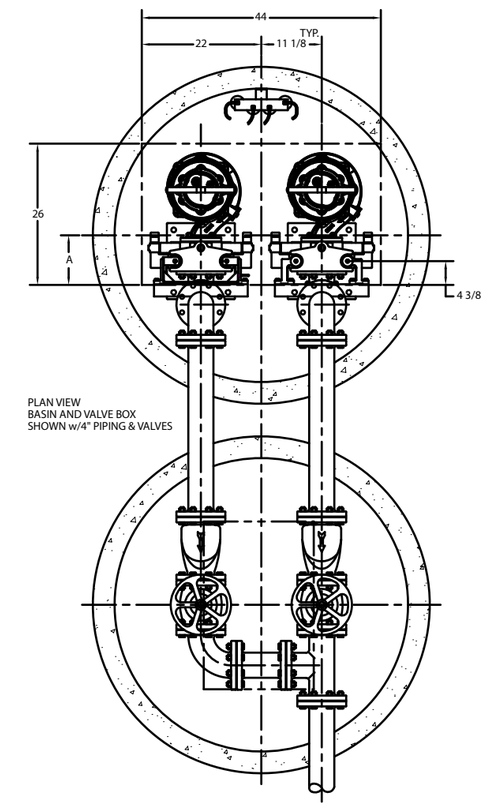

FOR MODELS: 3SC

MIN. SUMP DIA.	MIN. VALVE BOX DIA.	PIPING SIZE	A	B	C
4′ - 6″	3′ - 6″	3″	9-1/8	1″	10-1/2″
4′ - 6″	4′ - 6″	4″	9-1/8	1″	10-1/2″
5′ - 0″	5′ - 6″	6″	10-1/8	0″	11-1/2″

1101 Myers Parkway
Ashland, OH 44805
Ph: 855.274.8947
Fx: 800.426.9446

490 Pinebush Rd., Unit 4
Cambridge, Ontario N1T 0A5, Canada
Ph: 800.363.7867
Fx: 888.606.5484

pentair.com/hydromatic

All indicated Pentair trademarks and logos are property of Pentair. Third party registered and unregistered trademarks and logos are the property of their respective owners.

©2024 Pentair. All Rights Reserved.

HYD12707 (01-08-24)